B/Bt type tonearm installation manual

GLANZ B/Bt type tonearm installation manual

1. Determine the hole drilling position of the tonearm fulcrum (mounting screw part) using the mounting template enclosed with the product.
2. Insert the left end hole (φ7mm) describes as Platter Spindle of the mounting template to the center shaft (spindle) of turntable platter.
3. Rotate the template sheet and fix the position of the mounting hole of the arm base at 45 degrees when viewed from the top.
4. The distance between the center spindle to the center of mounting hole is 214mm (9 inch) and 239mm (10 inch).

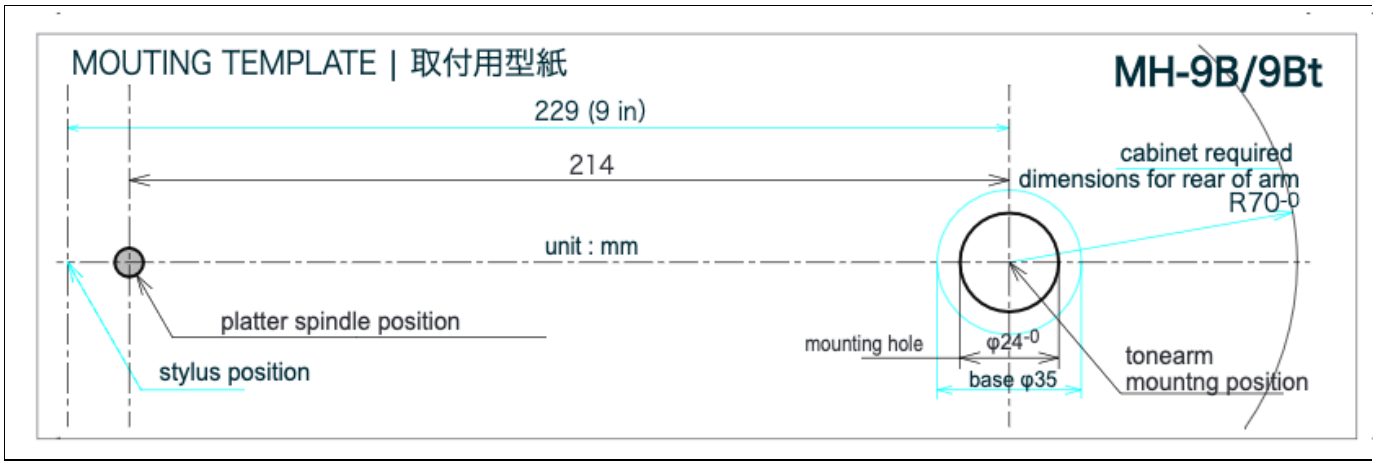

Fig : MOUTING TEMPLATE

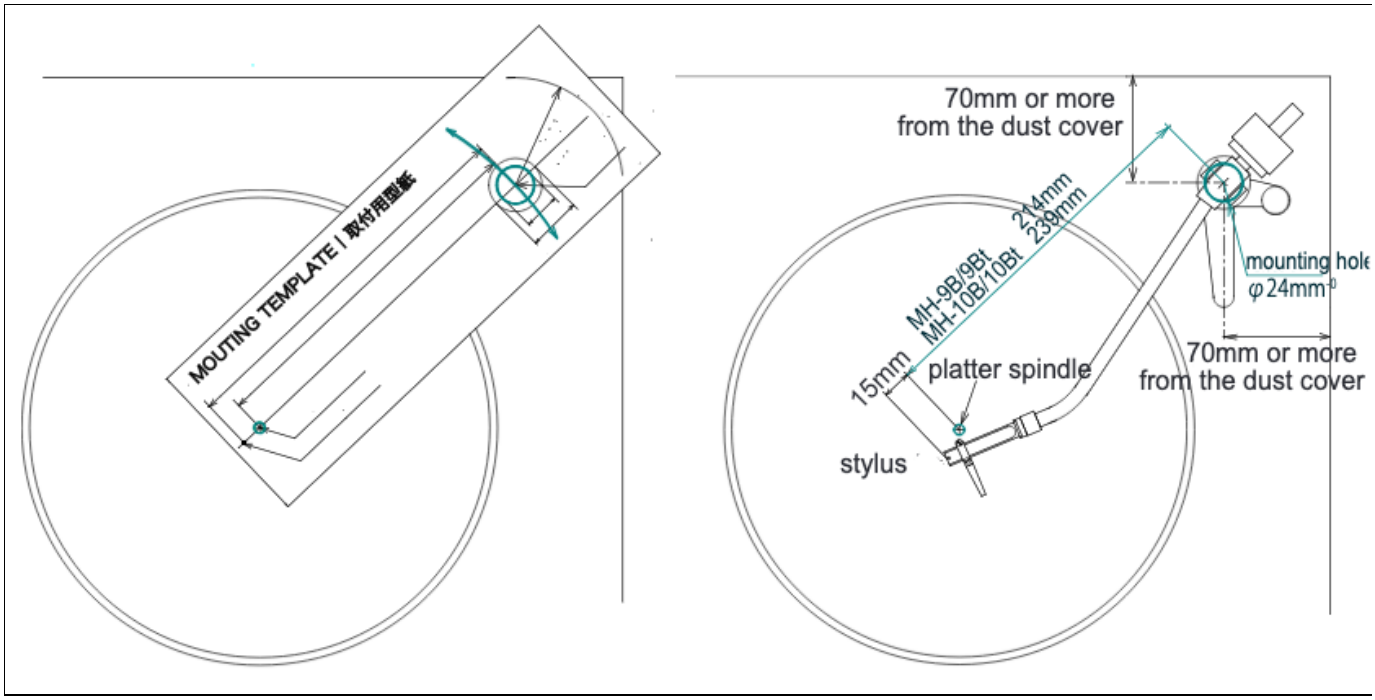

Fig : The drawing shows the template aligned to the turntable Fig : Tonearm mounting cross section drawing

*Points to be checked

(1) Make sure that the distance from the dust cover edge to the rear part of the counter weight has a 70mm or more distance so that it does not hit the dust cover (when the dust cover is used).

(2) Make sure that the armbase mounting nut does not hit the surroundings, the nut is able to tighten, or the output cord does not hit the surroundings. If the mounting board is thick and the screw length is not enough to tighten the nut, consider a long option base of [MH-244LS].

For detailed dimensions of the option base https://glanz.tech/e/optional/b-parts/

(3) Make sure that the horizontal movement range of the tonearm extends to the inner circumference of the record, and that the tone arm operates within a usable range.

(4) Do not apply any force to the tonearm when tightens the mounting nut of the base (install the tonearm on after installing the base).

(5) For those who install to the mounting plate, please use our exclusive option plate (sold separately)

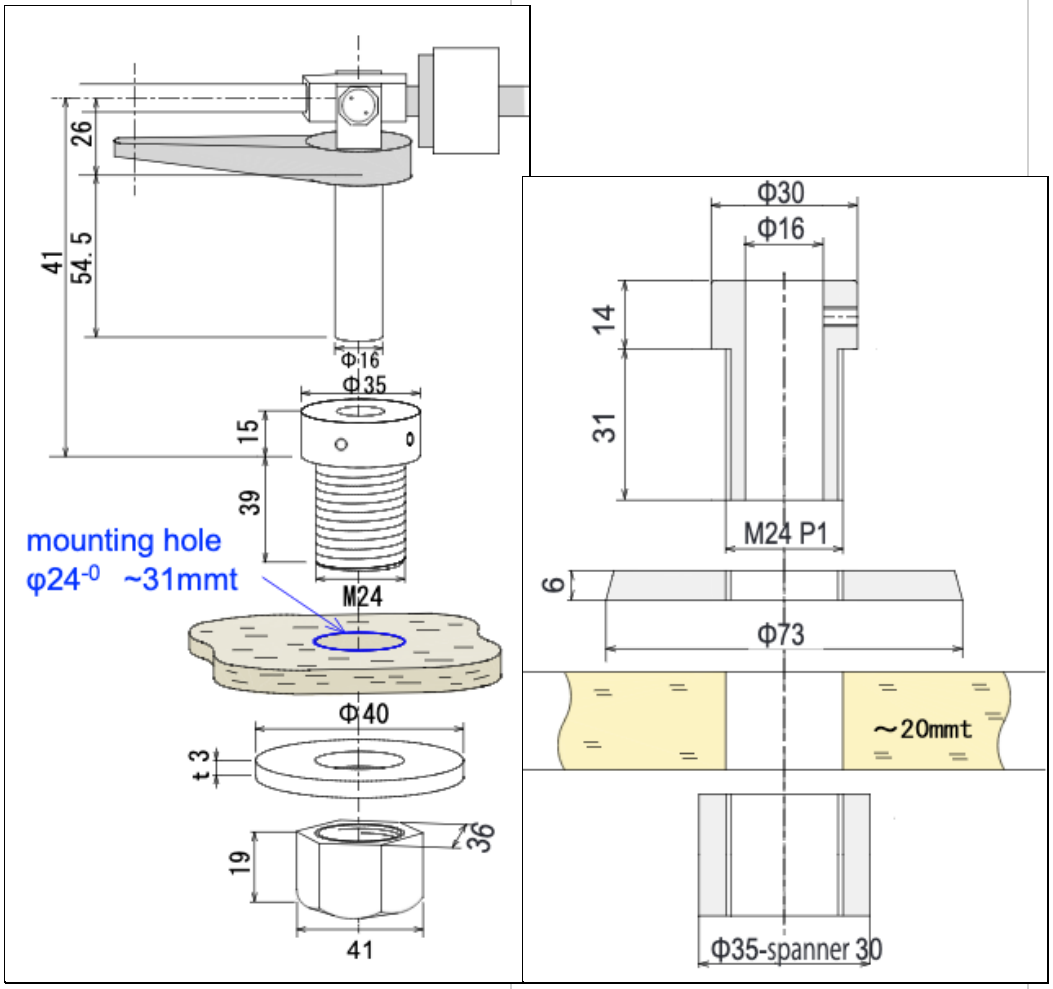

Fig : Tonearm mounting cross section drawing

MH-244S

Adjustment of tonearm height

1. Adjust the height of the tonearm so that the arm pipe is horizontal when the stylus tip of the cartridge is placed on the record.
2. While the cartridge height varies by each manufacturer, when installing the average height of a 16mm cartridge, considering the extra space that needs to install shorter height cartridge, raise the lift by 2mm to make the dimension from the top of the base mounting hole to the center line of the arm pipe 43mm (see Fig. ①(B)). The distance from the cartridge head shell mounting surface to the center of the tone arm pipe is 4mm (see Fig. ①(C)), so when a cartridge with 16mm height is mounted, 43(16 – 4) = 31mm. If a cartridge with 16mm height is installed, the dimension from the top of the base mounting hole to the top of the record will be 31mm (see Fig. ①(A)). Granz uses this 31mm as the design value. For cartridges that are lower than 16mm, such as a 14m height cartridge is installed, lower the lift by 2mm (lower the lift to the bottom). Even if you do not lower the lift by 2 mm, an error of ±2 mm will not affect the sound quality. If the height of the turntable platter is too high, it can be used with lifting up by 10mm which makes 39mm from the top of the base mounting hole to the top of the record (see Fig. ② (A)).
3. Loosen the two height adjustment screws (side and back of the base) and lift the tonearm to check the horizontal level (the distance between the center axis of the arm and the record surface is 12mm). It is convenient to place the height adjustment screw at the opposite side of the platter.
4. When the height is decided, tighten the two height adjustment screws.

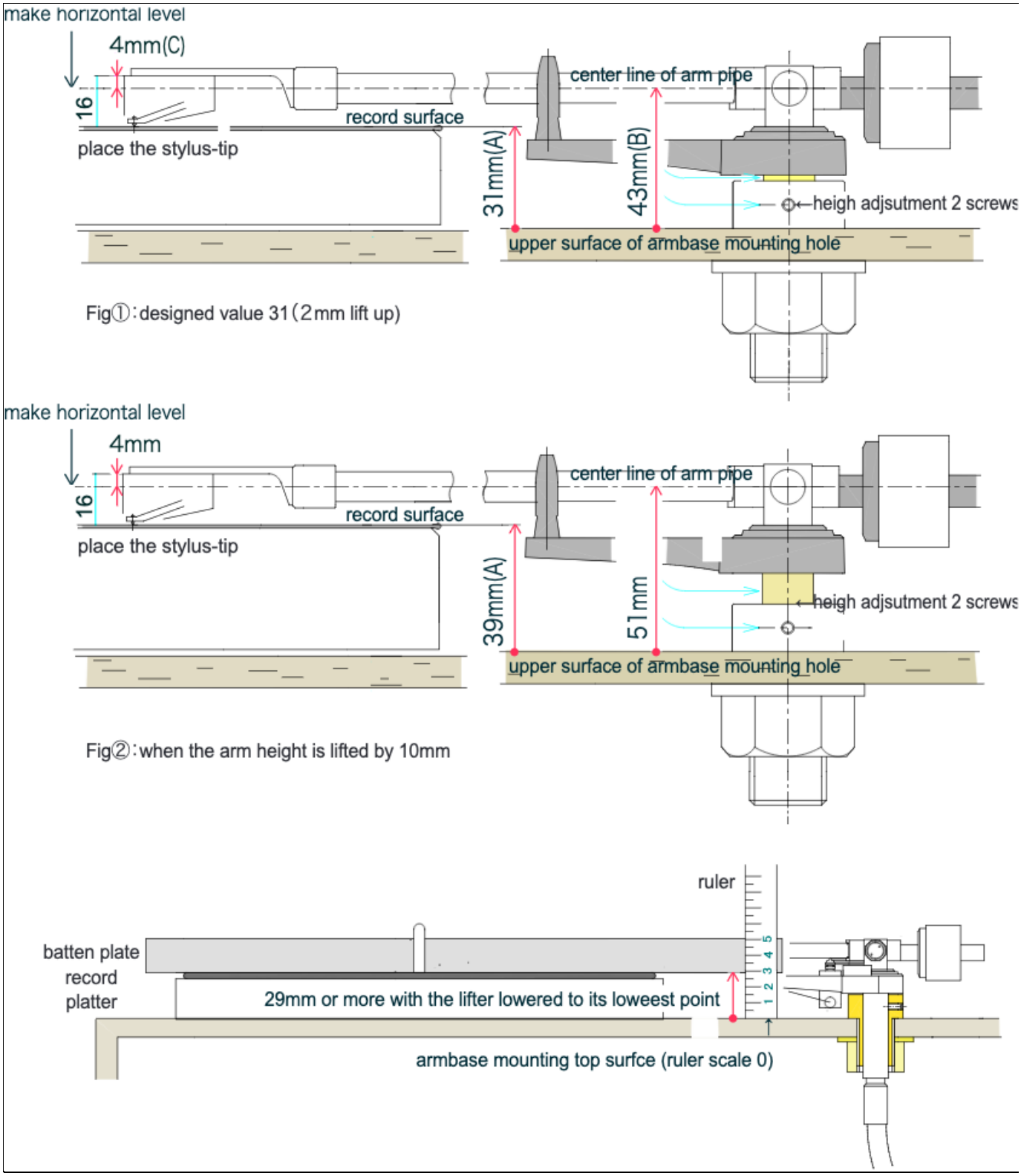

Fig : Dimensional confirmation drawing for mounting the tone arm (①, ②, ③ are dimensional confirmation drawings)

Adjustment after installation

How to adjust the tonearm after installed it.

1. Check the level of the turntable. Adjust the height of the turntable by turning the height adjust foot screws so that the entire turntable is horizontal.
2. Connect the output cable. And, after temporarily attaching the tonearm, insert the counter weight with turning it.
3. Install the cartridge to the head shell and insert it into the tip of the arm, slowly turn the lock nut to tighten it. Look at the cartridge from the frontward, and if it is tilted, hold the headshell and correct the tilt. If it is stiff, try loosening the headshell tilt adjustment screw on the underside of the arm pipe tip slightly to correct it.
4. When adjusting, the tonearm will move (to the outer circumference of the record) due to the function of the IFC (inside force canceller) so adjust the IFC scale to 0.
5. Loosen the height adjustment screw of the tonearm, level the arm and adjust it to a height that does not hit the record.
6. Unlock the armrest holder and turn the counter weight to balance the arm pipe so that it is horizontal.
7. Turn the scale of the weight only to set the scale value to 0. Next, turn the weight to match the stylus pressure value of the cartridge (it is about 2g).
8. Place the record on the platter.
9. Hold the finger hook of the headshell and gently place it on the record, but lay a small piece of paper on the record surface and place the stylus tip on it.
10. Loosen the two adjusting screws again so that the arm pipe is horizontal, and adjust the height (adjust with the screw that is easier to adjust, and finally fix the other screw).
11. Loosen and adjust the arm lifter height adjustment screw so that the stylus tip floats about 5 to 10 mm from the record surface when the arm lifter lever is raised (work with great care so as not to damage the record).
12. If the stylus cannot trace the record and is taken to the inner circumference when it is actually played, Increase the IFC scale little by little and stop at the level where the stylus does not jump. (The value on the IFC scale is not to be adjusted to the same value as the needle pressure).

GLANZ' tonearm has good trace sensitivity, so if IFC isn't necessary use with 0 position. The distortion caused by this structure is eliminated.

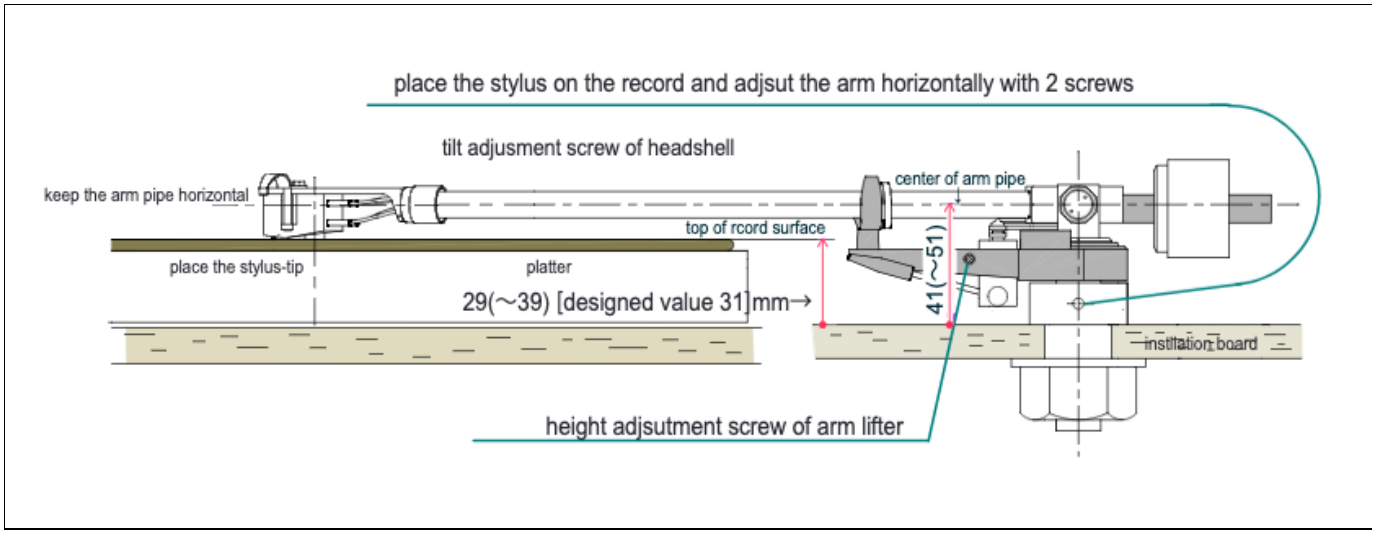

Fig : Tonearm installation completion drawing

/ Proudly powered by WordPress